Kidde Fire Systems
$HPCO_2$ Component Description
Reel

Effective: June 2020
K-81-1207 Rev AA

FEATURES

- ***UL Listed for HPCO2 Service***
- ***½ or ¾ ID Hose Available***
- ***1-in NPT Inlet***
- ***1-in NPT Outlet***

DESCRIPTION

The wall mounted reel provides a convenient robust storage solution for High Pressure Carbon Dioxide ($HPCO_2$) hand held hose line systems. The reel is constructed from steel material with an enamel red colored finish for corrosion protection. An adapter is required to properly connect the reel to the hose line inlet swivel. Disengaging the spring drag device allows deploying the hose using a hand over hand operation or similarly when rewinding a deployed hose.

SPECIFICATIONS

Pressure, Max:	3000-psi (206-bar)
Temperature, Min:	0°F (-17°C)
Temperature, Max:	130°F (55°C)

ORDERING INFORMATION

Description	Part Number
Reel, Wall Mounted	81-158994-100

REFERENCED COMPONENTS

Description	Reference Data Sheet
Hose Line System	K-81-1206
Adapter	K-81-1208
Hose Line	K-81-1209

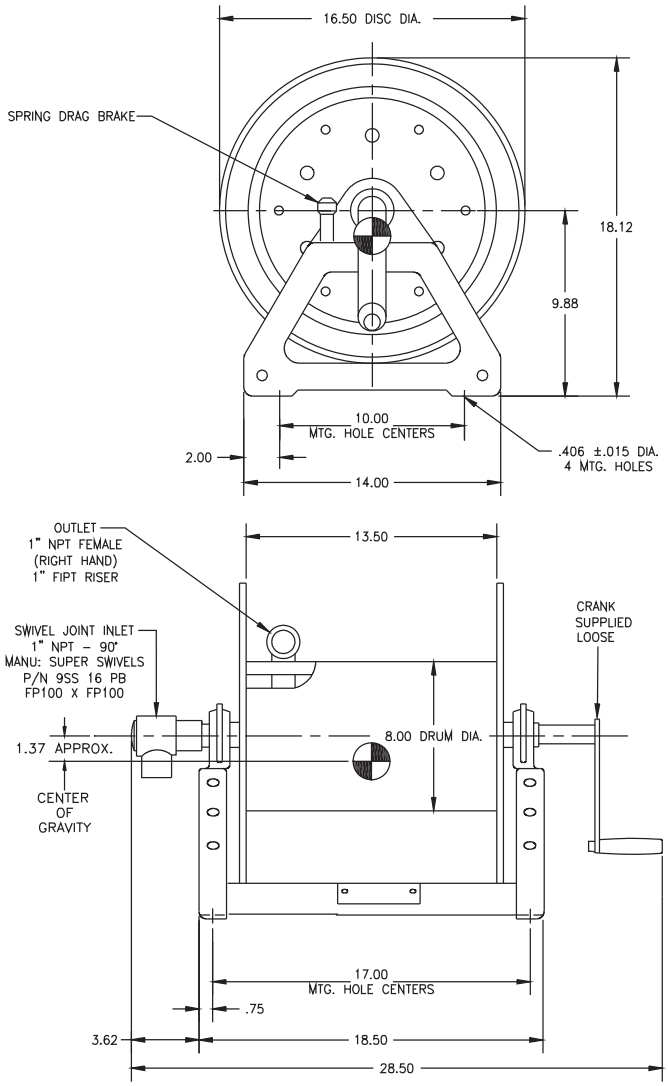

Figure 1. Reel Dimensions

EXPORT INFORMATION (USA)
Jurisdiction: EAR
Classification: EAR99
This document contains technical data subject to the EAR.

All trademarks are the property of their respective owners.
©2020 Carrier

This literature is provided for informational purposes only. KIDDE-FENWAL, INC. believes this data to be accurate, but it is published and presented without any guarantee or warranty whatsoever. KIDDE-FENWAL, INC. assumes no responsibility for the product's suitability for a particular application. The fire suppression system design, installation, maintenance, service and troubleshooting must be performed by trained, authorized Kidde Fire Systems distributors for the product to work correctly. If you need more information on this product, or if you have a particular problem or question, contact KIDDE-FENWAL, INC., Ashland, MA 01721 USA.
Telephone: (508) 881-2000.

Kidde Fire Systems
400 Main Street
Ashland, MA 01721
Ph: 508.881.2000
Fax: 508.881.8920
kiddefiresystems.com